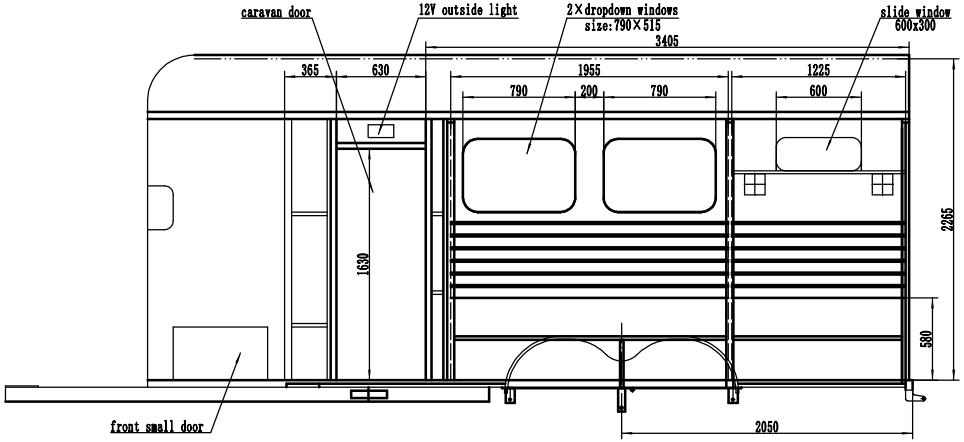

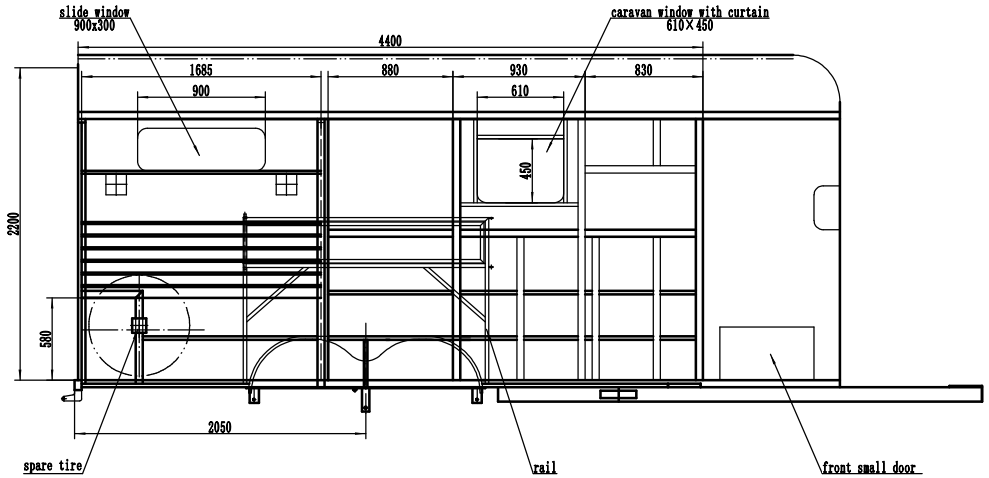

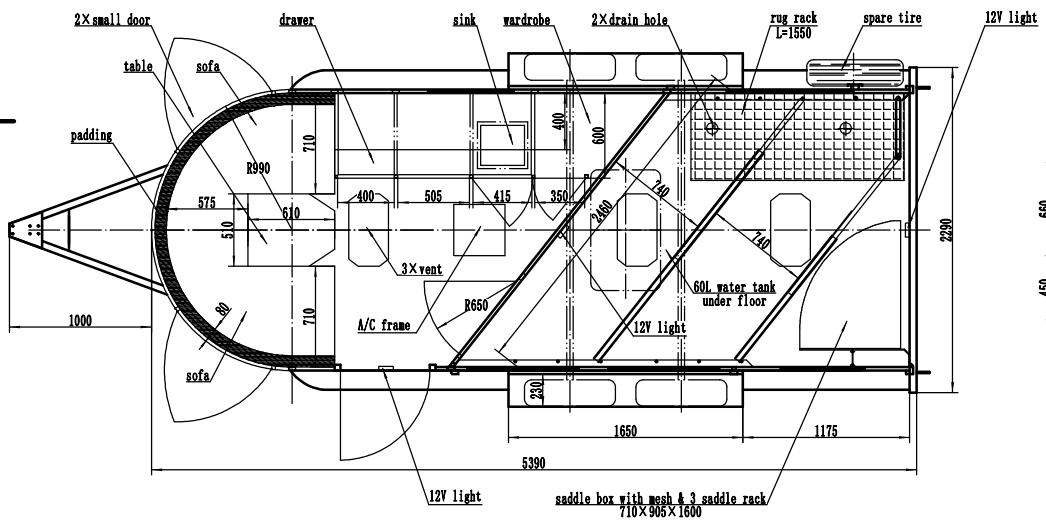

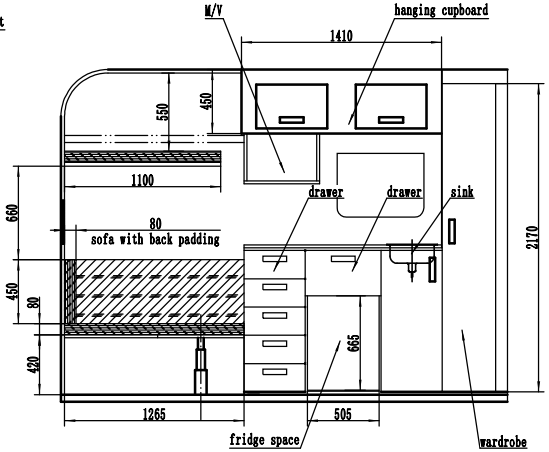

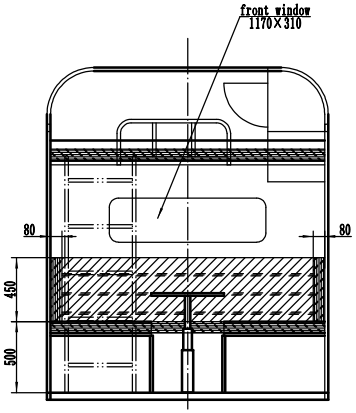

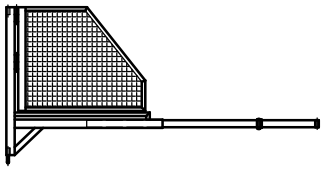

标记	处数	更改文件名	签字	日期	LAYOUT	HORSSEN TRAILER
设计		WFG				JHT.2HAL-CAM.X18049-00
					Q235A	图样标记 / 重量 / 比例 1:25
			日期	2018.5.24		共 张 / 第 张

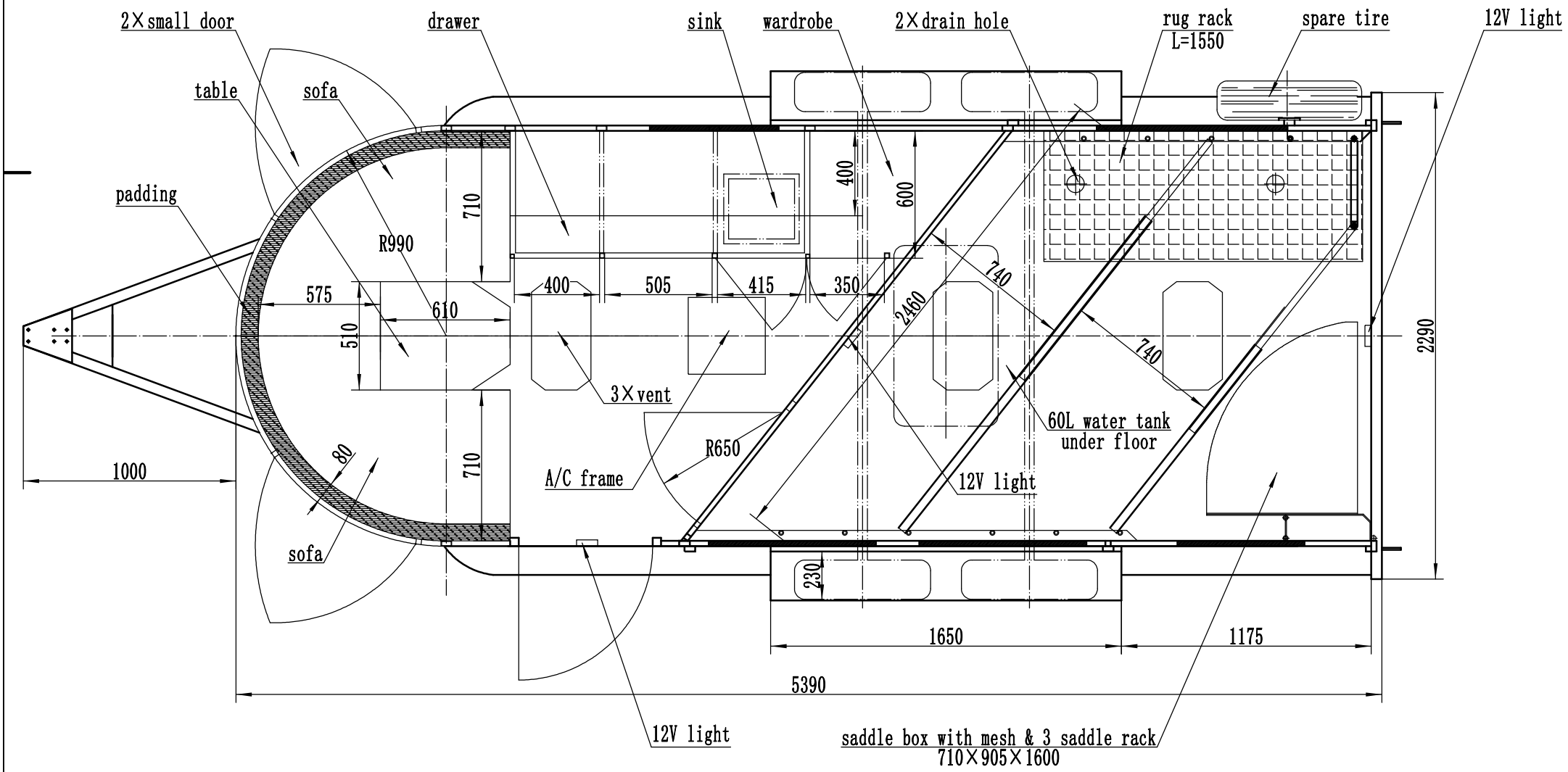
2×small door
drawer
sink
wardrobe
2×drain hole
rug rack
L=1550
spare tire
12V light
table
sofa
padding
R990
710
400
600
575
610
510
400
505
415
350
740
2460
740
2290
3×vent
R650
A/C frame
60L water tank
under floor
12V light
1000
80
710
sofa
230
1650
1175
5390
12V light
saddle box with mesh & 3 saddle rack
710×905×1600

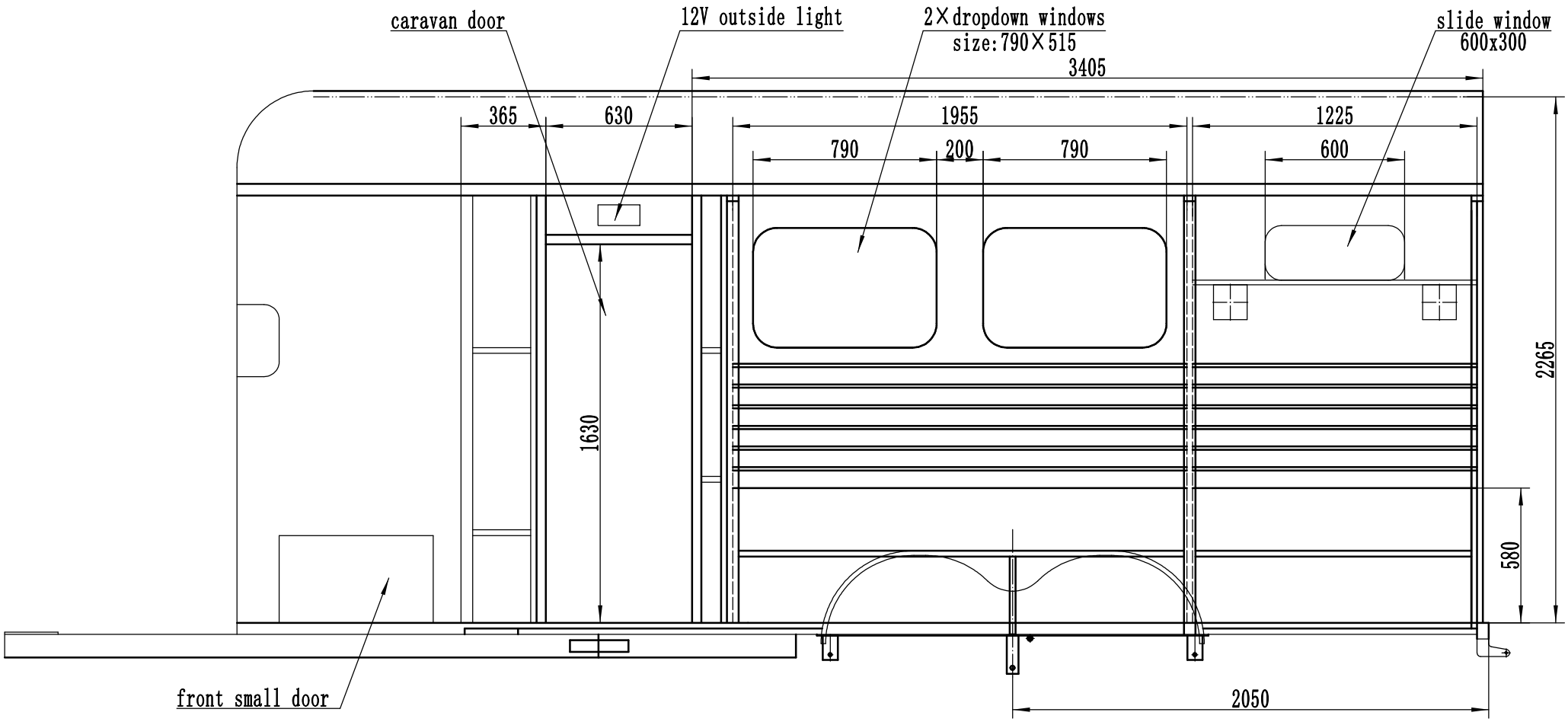
caravan door
12V outside light
2×dropdown windows
size:790×515
slide window
600x300
3405
365
630
1955
1225
790
200
790
600
1630
2265
580
2050
front small door

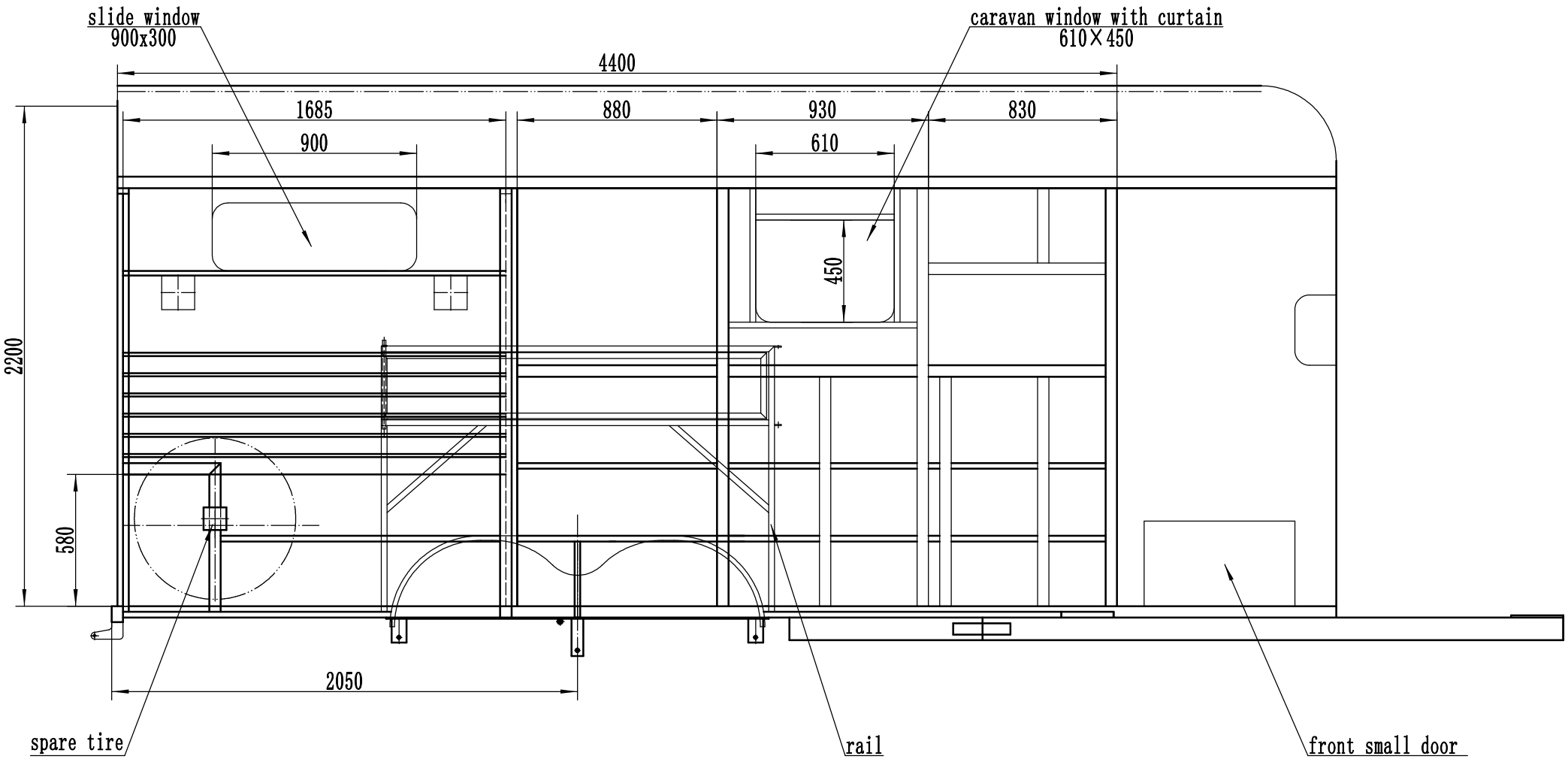
slide window
900x300
caravan window with curtain
610×450
4400
1685
880
930
830
900
610
450
2200
580
2050
spare tire
rail
front small door

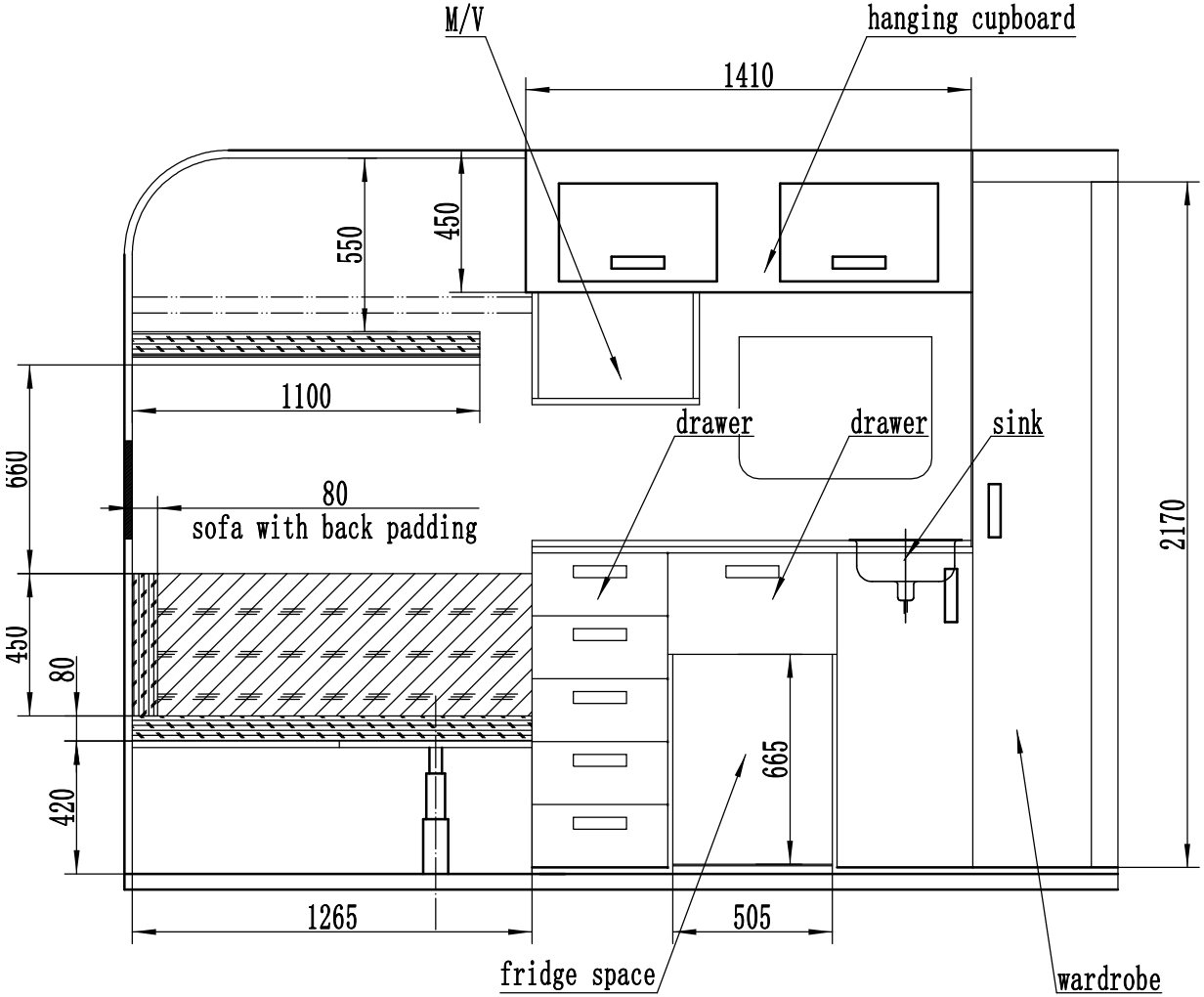
M/V
hanging cupboard
1410
550
450
1100
660
80
sofa with back padding
drawer
drawer
sink
2170
450
80
420
665
1265
505
fridge space
wardrobe

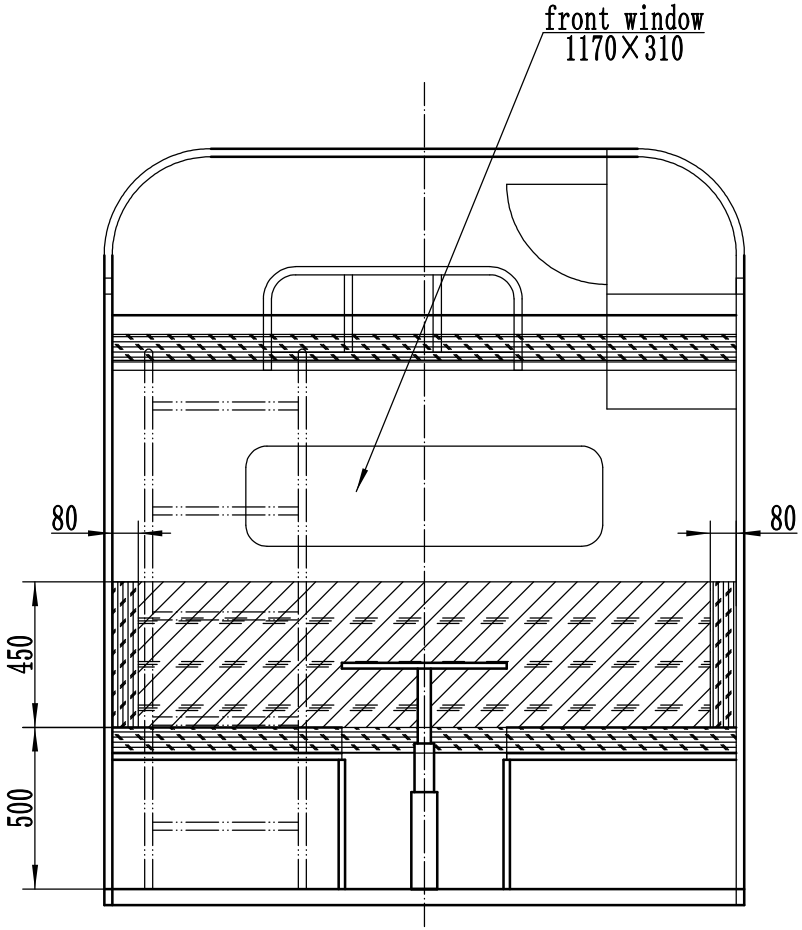
front window
1170×310
80
80
450
500